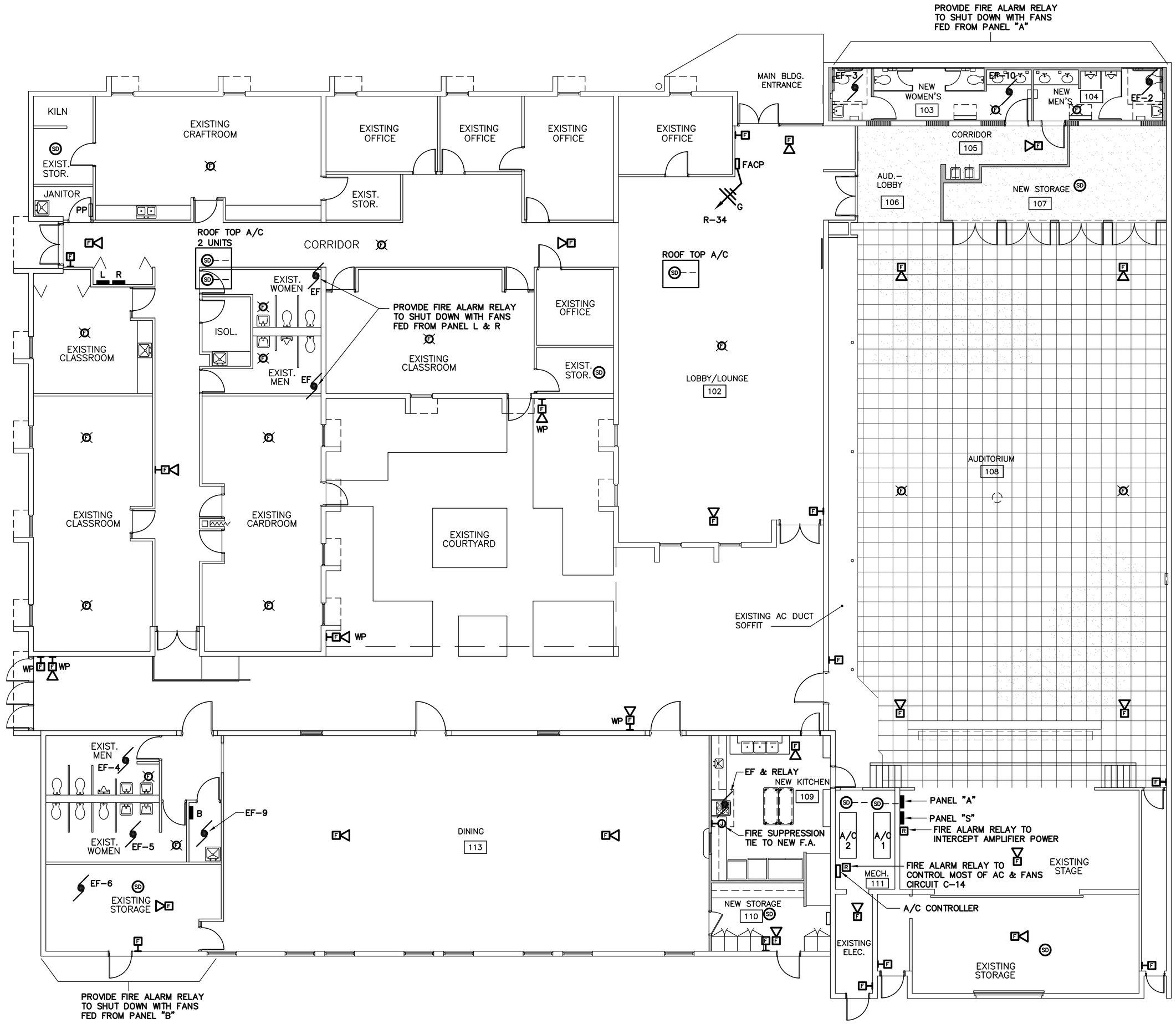

FIRE ALARM PLAN

SCALE: 1/8"=1'-0"

N

FIRE ALARM SYMBOLS (used this sheet)

		Notifier
FACP	Fire Alarm Control Panel	Min 100 Point
F	Manual Pull Station at 48"	BGX101-L
F	Strobe Light Ceiling Mtd.	wheel lock ch series
F	Combination Sounder/Strobe Clg. Mtd.	wheel lock ch series
SD	Duct Detector Housing & SD	DHX-502 & REMOTE INDICATOR
WP	Weatherproof	
SD	Smoke and heat Detector Ceiling Mtd.	

1. SYSTEM SHALL CONFORM TO NFPA-72 AND 101 AND BE INSTALLED PER NFPA-70
2. PROVIDE COMPLETE SYSTEM; U.L. LISTED INCLUDING POWER SUPPLIES, ADA STROBES, AUXILIARIES, BATTERY BACK UP
3. USE PLFA/FPL ALARM CABLE THROUGHOUT PER NEC-70
4. PROVIDE NEW DUCT DETECTORS, SAMPLE TUBES AND SHUTDOWN RELAYS
5. SEE SPECIFICATIONS DIVISION 16
6. COORDINATE CEILING MOUNTED DEVICES WITH LIGHT FIXTURES
7. SEE FRED LIPPMAN RENOVATION PROJECT FOR HVAC AND FAN CONTROLS AND MOST LIGHT FIXTURE LAYOUTS

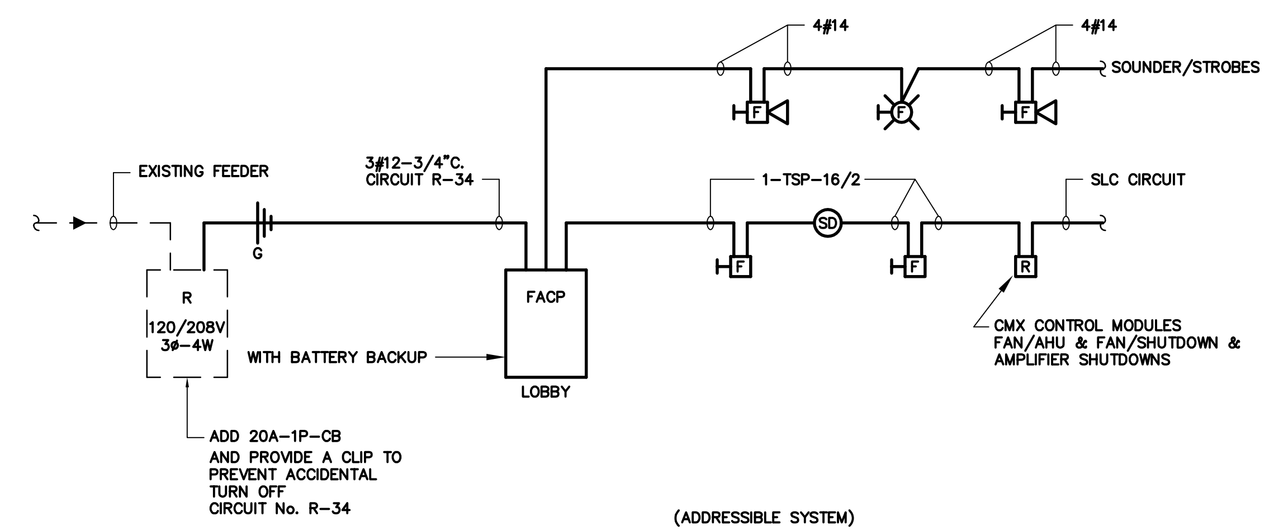

(ADDRESSIBLE SYSTEM)

NEW FIRE ALARM RISER

NOTE: ALL FIRE ALARM CABLE IN PUBLIC AND OFFICE SPACES SHALL BE CONCEALED IN WALL CAVITIES. CUT OPEN EXISTING DRYWALL AS REQUIRED TO CONCEAL. PATCH DRYWALL SMOOTH TO MATCH EXISTING.

NORMAN F. BRAY, P.E., INC.
CONSULTING ELECTRICAL ENGINEER FLORIDA REG. NO. 9978
FLORIDA CERTIFICATE OF AUTHORIZATION NUMBER 1124
2131 HOLLYWOOD BOULEVARD
SUITE 501 – BOULEVARD LANDMARK
HOLLYWOOD, FLORIDA 33020-6753
(954) 925-3217 FAX (954) 925-3247
E-MAIL: bray501@bellsouth.net

DN: ML JOB# 10063
CK: N.F.B. DATE 28 MAY '10

SEAL

NO.	DATE	DESCRIPTION
1	7-1-10	REVISE ENTIRE DRAWING

REVISIONS

City of Hollywood, Florida
Department of Design and Construction Management

SCALE AS SHOWN
DESIGNED
DRAWN
ISSUE DATE 05-06-2010

FRED LIPPMAN MULTI-PURPOSE CENTER RENOVATION

FIRE ALARM PLAN

SHEET FA-1
1 OF 1

PR 09-028